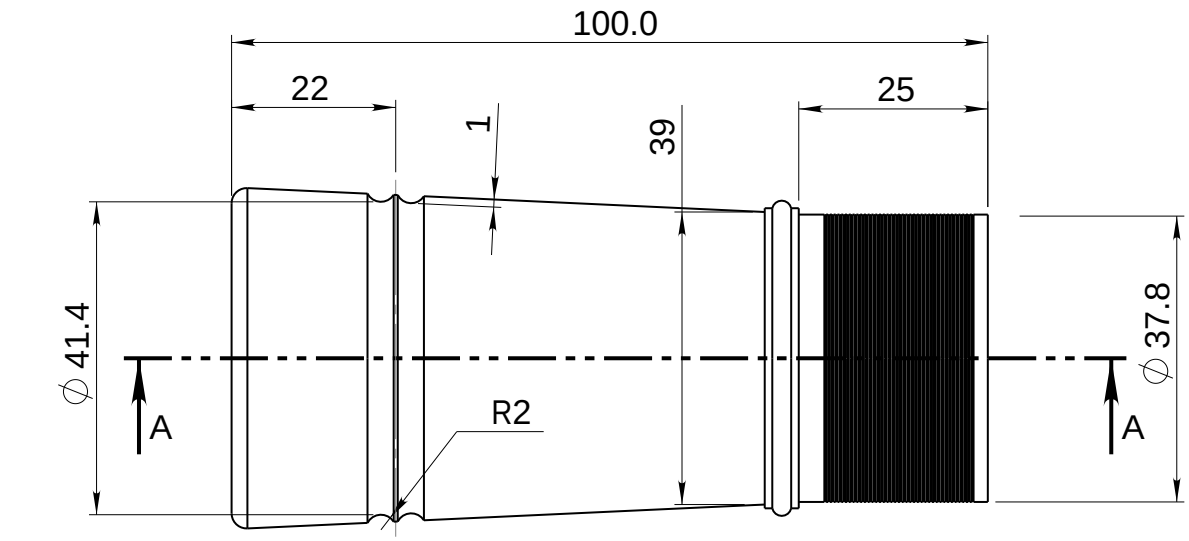

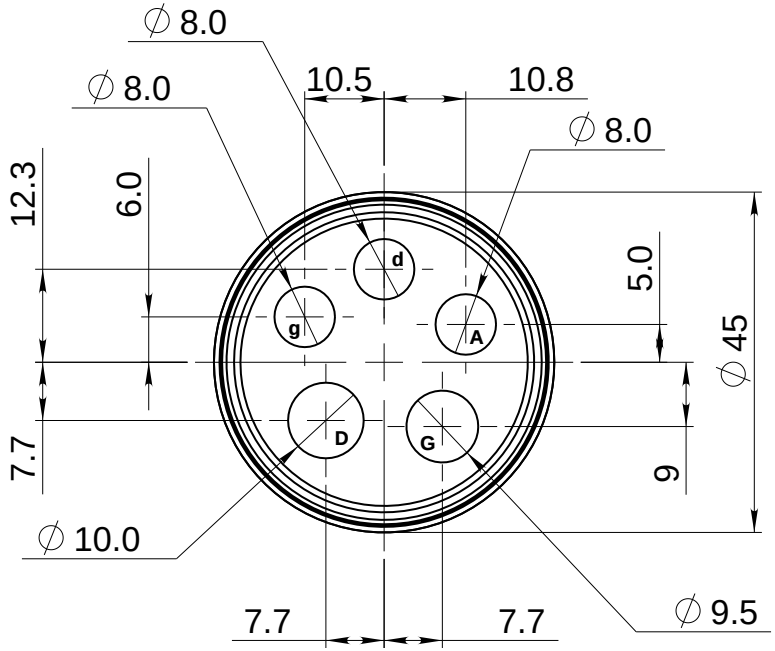

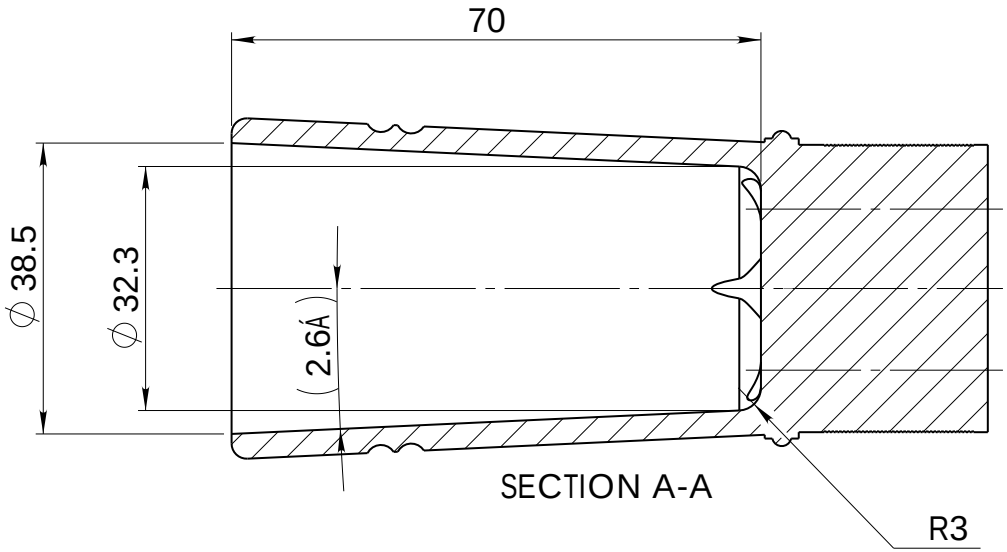

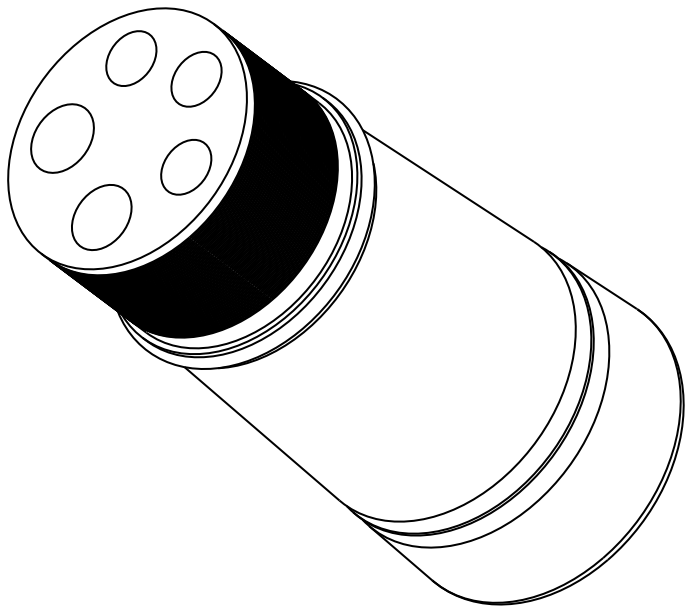

[a] Mike Nelson 26/05/2010

5 DRONE STOCK

Note: this drone is dimentionally identical to the standard 4 drone stock