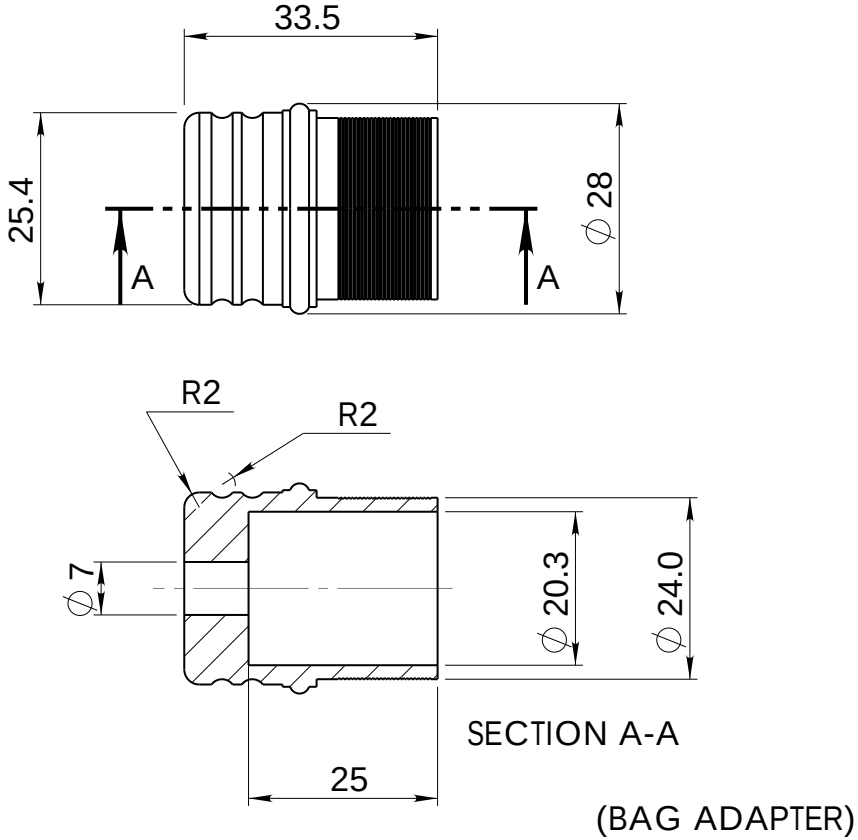

REMOVABLE CHANTER STOCK

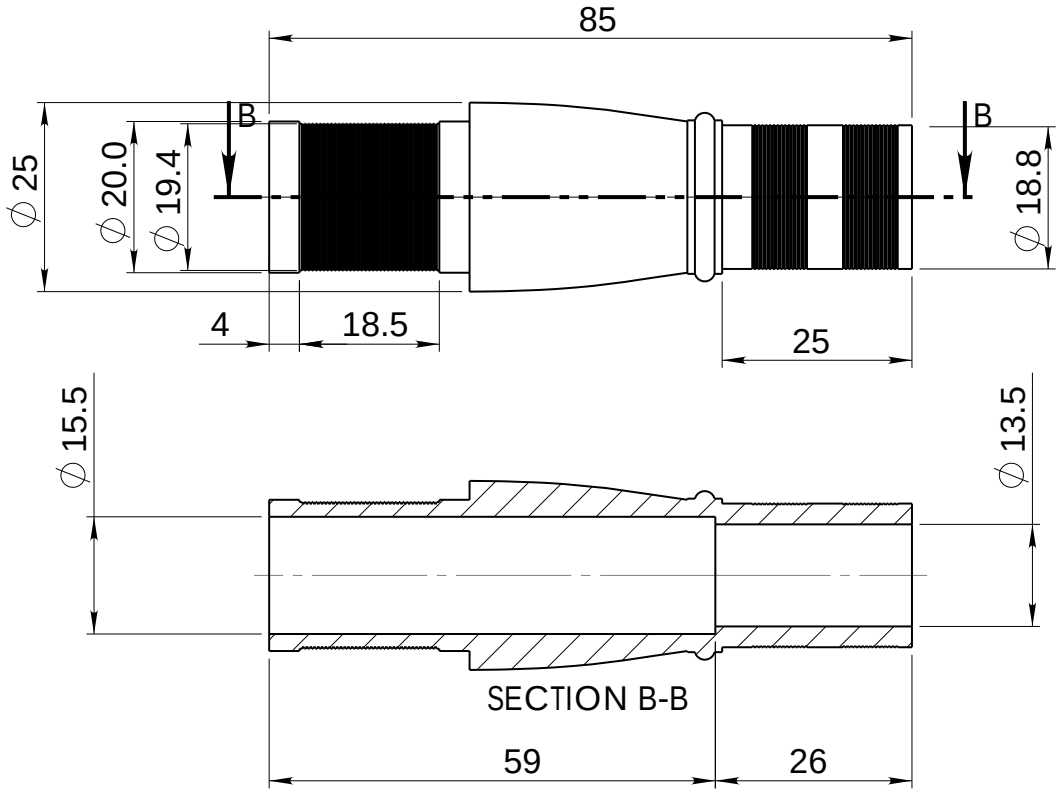

REMOVABLE CHANTER STOCK

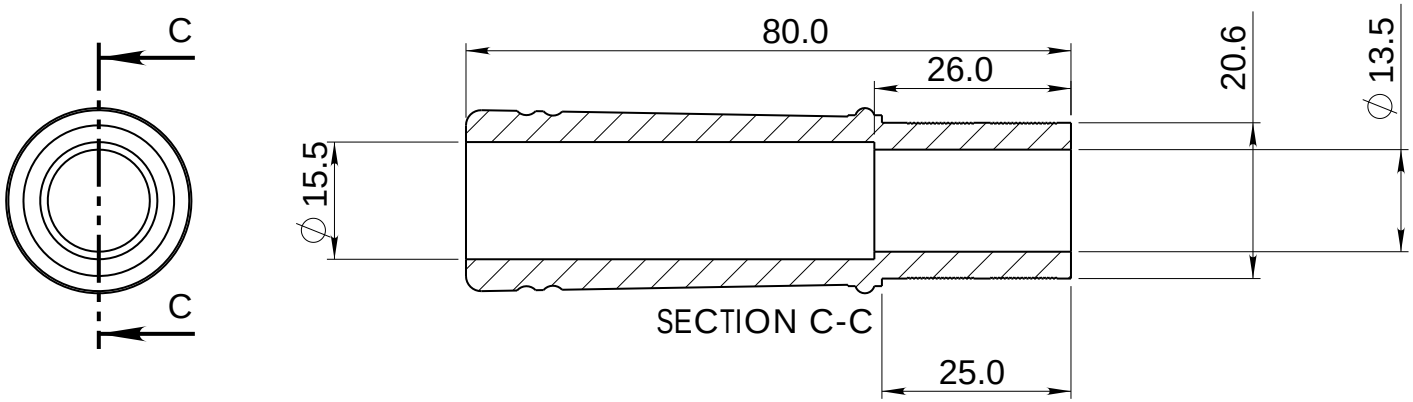

STANDARD CHANTER STOCK

[a] Mike Nelson 6/05/2010