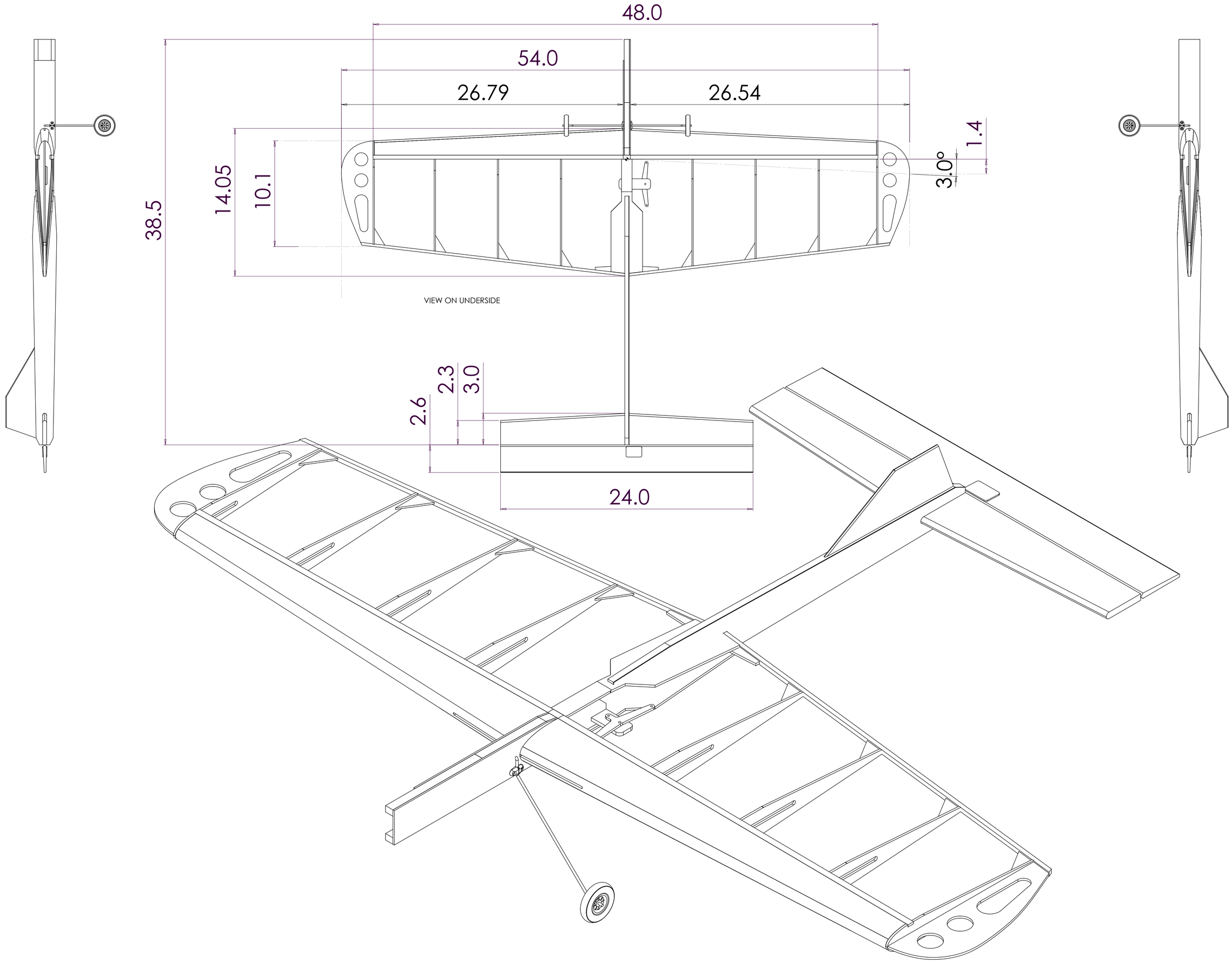
48.0
54.0
26.79
26.54
1.4
3.0°
14.05
10.1
38.5
VIEW ON UNDERSIDE
2.3
3.0
2.6
24.0

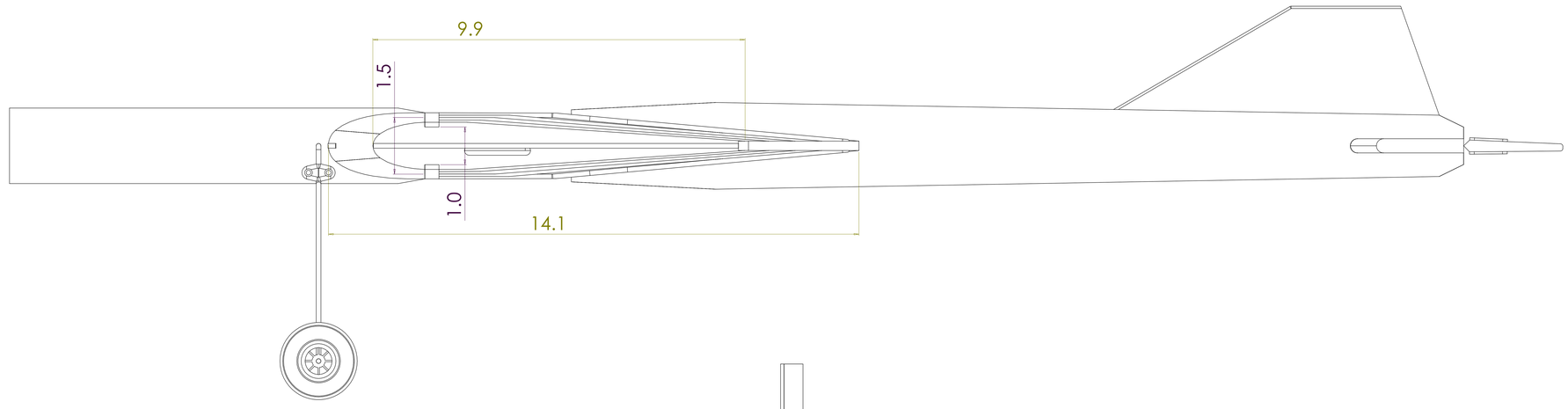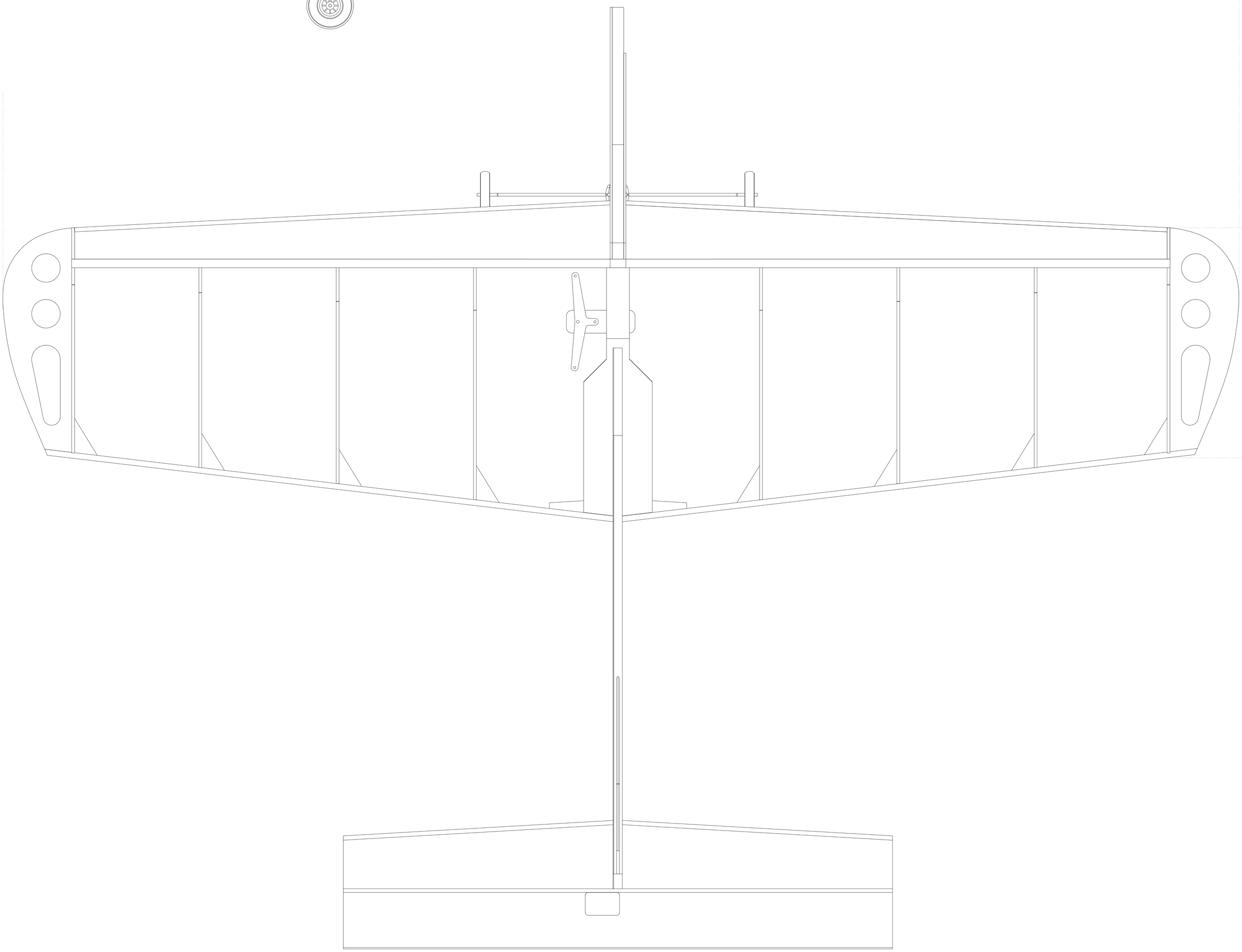
9.9
1.5
1.0
14.1