REV.	DESCRIPTION	DATE	APPROVED
B	DIMS AND TOLS ADDED	28/06/2009	MRN

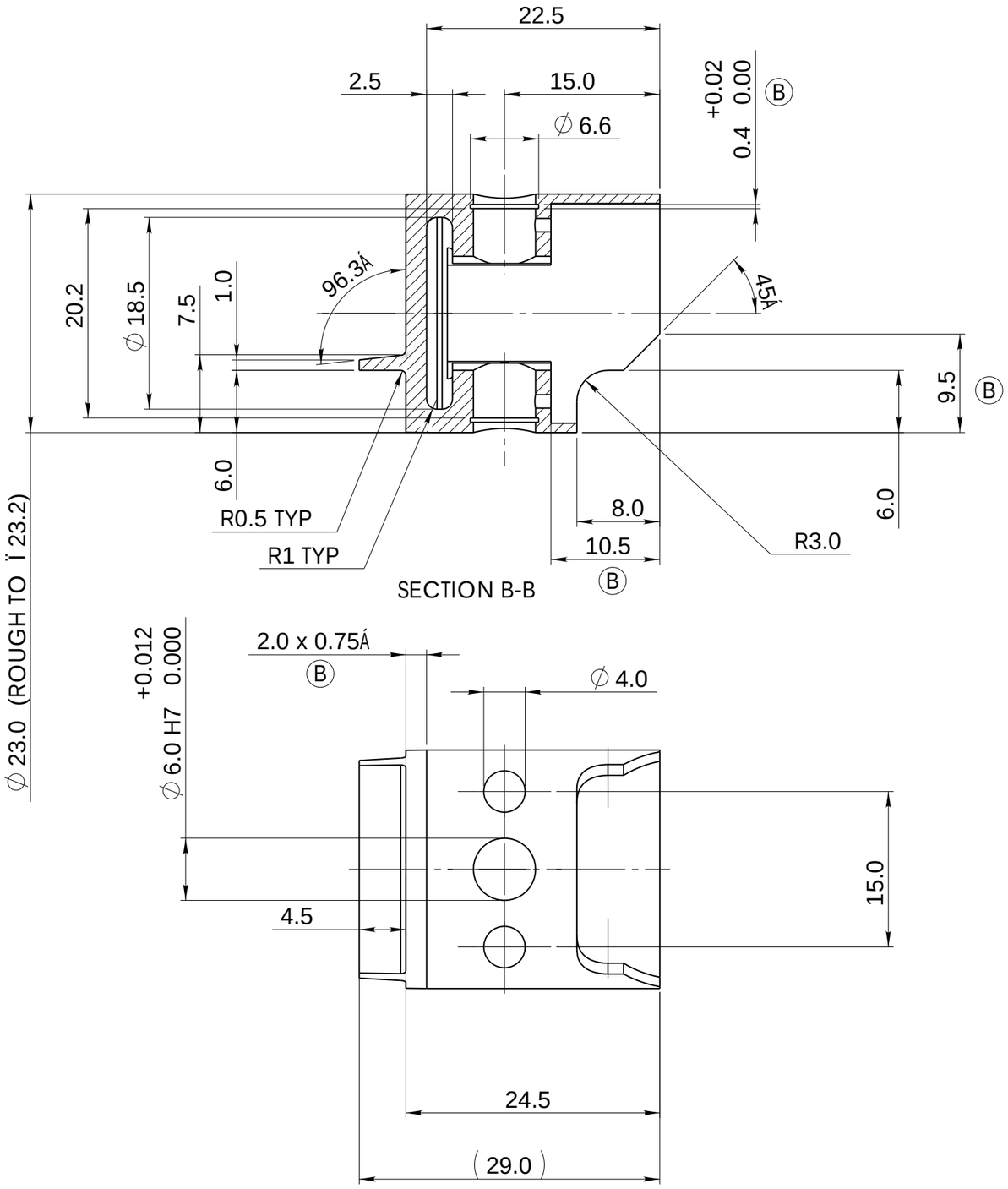

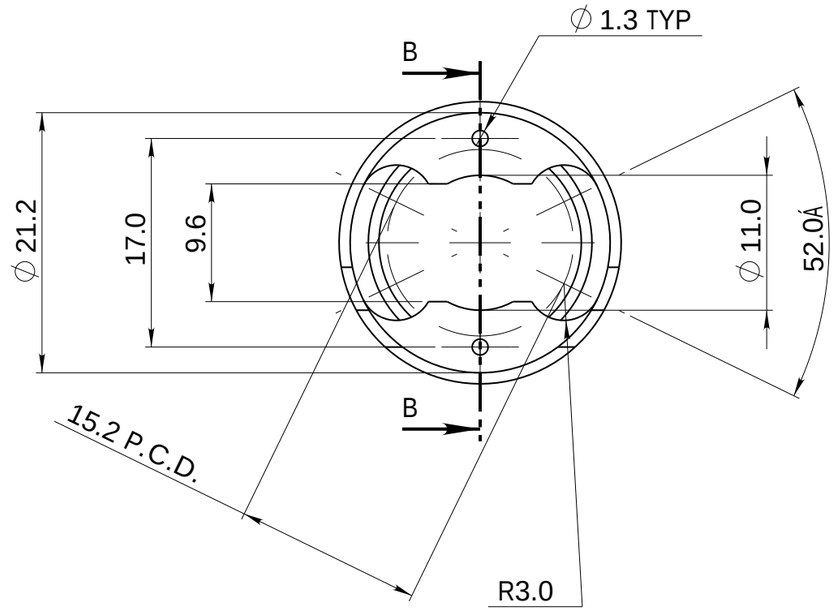

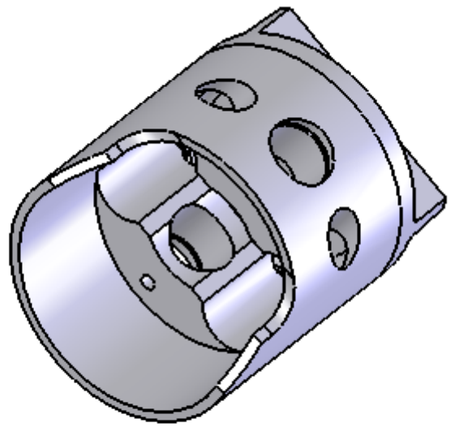

© Machine Concept Ltd
6 Fieldview, Bar Hill
Cambridge, CB23 8SX.
United Kingdom
Tel: +44 (0) 1954 780772
mike@machineconcepts.co.uk

All dimensions are in mm unless otherwise stated.
No dec pl : ± 0.5mm
1 dec pl : ± 0.2mm
2 dec pl : ± 0.1mm
3 dec pl : ± 0.05mm
angular : ± 0.2˚
DO NOT SCALE

3rd Angle

Drg By.	Chk'd By.	Approved - date	Model Name	Date.	Scale
MRN			piston	25/01/2009	2:1

Material.
AL ALLOY 20% SILICON POWDER METAL DISPAL A250 (B)

Finish.
LAP TO FINAL O/D

Title.
TURNER 61 LS PISTON

Drg No.
BT1-07

A3

Sheet number.
1 of 1