REV.	DESCRIPTION	DATE	APPROVED
A	initial issue	27/06/2009	
B		27/06/2009	

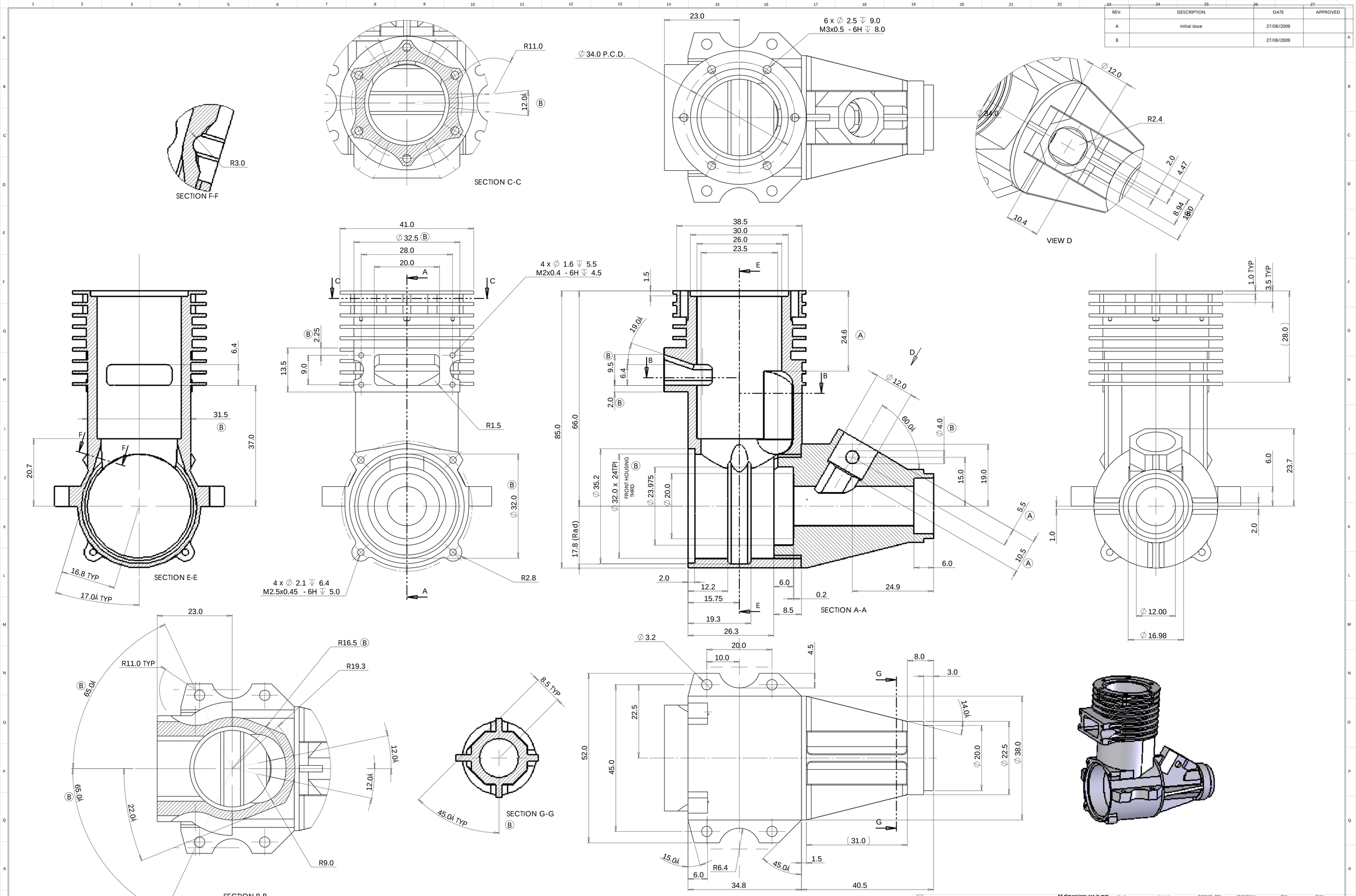

© Machine Concept Ltd
6 Fieldview, Bar Hill
Cambridge, CB23 8SX.
United Kingdom
Tel: +44 (0) 1954 780772
mike@machineconcepts.co.uk

All dimensions are in mm unless otherwise stated.
No dec pl : ± 0.5mm
1 dec pl : ± 0.2mm
2 dec pl : ± 0.1mm
3 dec pl : ± 0.05mm
angular : ± 0.2°
DO NOT SCALE

3rd Angle

Drg By.	Chk'd By.	Approved - date	Model Name	Date.	Scale
MRN	BT		crankcase assy	25/01/2009	2:1

Material. ALCOA 4032 ALUMINIMUM

Title. TURNER 61 LT LS CRANKCASE

Finish. NATURAL

Drg No. **BT1-02**

Sheet size. A1 Sheet number. 1 of 1